CSM Debrief

We build history and Imagination

Chip Holterhoff, Secretary / Editor

July 2026



A Message From The Prez

At the June meeting, I was able to share a possible design for a new show / club T-shirt. The feedback as overwhelmingly positive and some great suggestions were put forward.

Based on members' feedback, the following refinements have been made: a Chevy Camaro replaces the previous car to honor our Norwood Assembly plant. The last Chevy Camaro rolled of the assembly line August 26, 1987. Next, the plane has been updated to an F-16 in honor of GE Aerospace located in Springdale, Ohio. GE Aerospace played a big roll in development and testing of the GE F110, GE F100 and GE 129 engines for the F-16. Lastly, we have included a ship: the USS Cincinnati submarine – SSN 693, commissioned February 19, 1977 and decommissioned July 29, 1995. A memorial to the USS Cincinnati now sits in Mason, Ohio.

With members decked out in matching shirts at our upcoming show in October, we increase club visibility for our guests making it easier for them to spot a member should they need assistance or have questions. It also allows us to display our pride in our club and our city and its amazing history.

As stated at the meeting, the club has funds to cover the cost for those volunteering and working the show in October – but should you like to make a $10 donation, it would be welcomed.

Happy Modeling!

Will Kuhrt

In this Issue

- Region IV Events
- IPMS National Convention News
- Meeting Highlights
- Upcoming Door Prize & Raffle
- Model Kit News
- CSM Juniors
- Interview with Performance Hobbies
- A Visit To Wonderland

President: Will Kuhrt, wkuhrt719@gmail.com
Vice President: John Brugger, jbrugge@fuse.net
Secretary: Chip Holterhoff, mrchipholt@gmail.com
Treasurer: Randy Dosier, spad713@gmail.com

Regional Events

Date	Event	City
Aug. 5 - 8	**IPMS National Convention**	**Grand Wayne Conv. Ctr. Ft Wayne, IN**

Note that Nats tends to suck all the air for other IPMS events and shows during the summer months. I'll continue to list anything that's notable during the summer, IPMS or not, if it looks like it might be of interest. At this time Nats is it on the calendar.

IPMS National Convention News

Just a reminder that early registration is open until June 30th. Save $10 by registering in advance rather than day of show.

Also, the list of seminars and workshops is starting to be posted. As always there are some great opportunities to learn advanced modeling techniques from some of our hobby's best modelers. Check out the listing on the Nat's website.

Notes From the Secretary

We'd like to broaden the scope of this newsletter by including information and experiences that you think will help, or at least amuse, your fellow modelers.

I'd like to remind everyone that we'd like to ask you to share your Gorilla Glue stories. If you have a tale to tell about your experiences using Gorilla Glue, we'd like you to share it with the rest of the club. Using it on an assembly where regular glue just wasn't working? Tell us about it. Saved you at a show when an emergency repair was needed? Tell us how it saved the day. It's becoming more and more a regular, not special, part of assembling a kit. Put your writing skills to good use and share your experiences with this new tool in your kit.

"Pints and Plastic" is returning. We'd like to re-start our previous effort to have a regular social meeting at a local watering hole. We need some input from everyone/anyone as to; How often? Where? Same place every time or change venue each time? Afternoons or evenings? Weekdays or weekends? Drop me a note with your ideas on this.

Send your submission to me at mrchipholt@gmail.com

Meeting Highlights

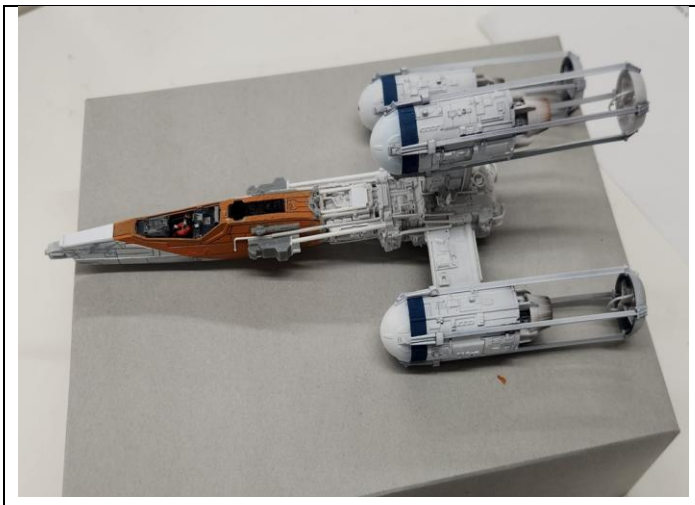

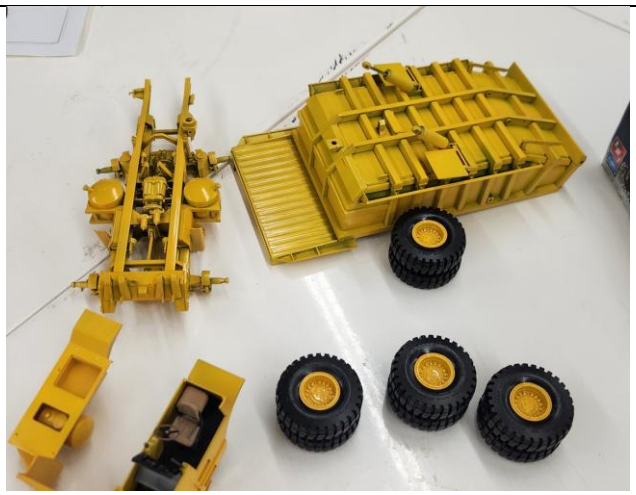






602


Jagdpanzer 38(t) Hetzer Mittlere Produktion
GERMAN TANK DESTROYER HETZER MID PRODUCTION
TAMIYA
1/35ミリタリーミニチュアシリーズNO.285
ドイツ駆逐戦車 ヘッツアー 中期生産型



Upcoming Door & Raffle Prizes

The next meeting will take place July 5, 2026 2:00 – 4:00 PM at The Hawk Building
4184 Taylor Road, Batavia, OH 45013

Door Prize	Raffle
1/72 Hasegawa F9F-2 Panther	1/35 Takom V-1 Flying Bomb
“Fighters of the Luftwaffe” book	1/72 Tamiya Supermarine Mk.I
1/600 Airfix HMS Victorious	1/16 Dragon F542 Gunner Figure
	Sturmgeschütz III book

Model Kit News

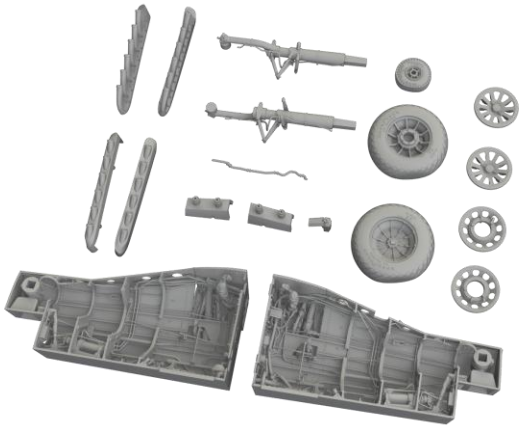

The Royal Hybrid edition kit of the famous US fighter aircraft **P-51B Mustang in 1/32 scale**.
The kit offers markings for 8 aircraft of 8th and 9th Air Force

- *plastic parts: Eduard*
- *marking options: 8*
- *decals: Eduard*
- *PE parts: yes*
- *painting mask: yes*
- *resin parts: yes, cockpit, undercarriage bays, wheels, guns exhausts and antennas*
- *extra: a pictorial book about service of the P-51B/C Mustangs written by Jan Zdiarský*

Royal Hybrid Edition

The Royal Hybrid range represents a combination of plastic parts and 3D-printed components. Each part of the kit has been designed to offer the highest possible level of detail and usability.

Large parts such as fuselages, wings, and other airframe components featuring surface details like rivets and hinges – forming the basis of the kit – are produced in plastic (HPS) using metal injection moulds. This ensures high-quality surface detail and easy assembly.

Small parts and assemblies such as cockpits and landing gear bays are produced using modern 3D printing technology. This allows a level of detail that cannot be achieved with traditional injection moulding. It also enables larger integrated assemblies with many details printed as a single part, eliminating the need to break down fine details into multiple components during production.

For example, a landing gear bay base forms a single detailed assembly, with only a few small parts added during construction – mainly to simplify painting of the complete assembly. This differs from traditional plastic kits, where such assemblies must be built from many separate small parts.

Please note: printed parts are an integral part of the kit – the model cannot be built without them.
The P-51B Mustang is the very first model in the new Royal Hybrid range, which represents a premium extension of the standard Eduard Hybrid line. **Pre-Orders are being take at Squadron.com!**

CSM Juniors

The CSM Junior Club did not have a June meeting due to schools ending and allowing the kids and family to have time for fun.

We currently have **Four** to **Five** of our juniors committed to attending the Nats! They are busy working on their models for the show. I am very excited for them!

In August, we will celebrate **ONE YEAR** of our Junior club! What an achievement – and over time, I am confident we will continue to grow it. I am always forever thankful for the amazing support the Cincinnati community has given these kids and families.

Our next meeting will take place Sunday, July 12.

- **Second Sunday of every month**
  - **MidPointe Library West Chester**
    9363 Centre Pointe Drive
    West Chester 45069
  - 2:00 pm – 3:30 pm

.

An Interview with Performance Hobbies South

by Will Kuhrt

Performance Hobby South has been an amazing sponsor of our annual model show. I had a chance to interview Aaron McCoy, the owner, and learn his story.



What got you started in the hobby business?

My father, Tom McCoy, has had a hobby shop since 1983 in Rochester, NY. It is called Performance Hobbies. I spent my whole childhood in his store, and at the age of 10 I decided that I didn't want to do anything other than be like my dad and have my own shop one day.

How long have you been in business at your current location?

I have been in business since September of 2024.

You seem to be involved with the community – by hosting races for RC cars, donating to the Cincinnati Scale Modelers October show. What drives your giving nature?

This hobby has always been about community and face-to-face interaction. One of the best ways to drive the growth of the community is by hosting events and donating to good organizations such as The Cincinnati Scale Modelers. When people come together, we can share our ideas and all the things that make us so passionate about the hobbies we have. Community is the main reason the online shopping world can't push out the small brick and motor shops across the country. I love giving back to all the groups that have helped build this hobby because I never want to see what love go away.

When you had your Grand Opening, you held a model contest. It was a lot of fun. Have you thought about hosting something like that again?

I have given it a lot of thought, and I will be holding more model contests in the future.

What are some of the challenges you have faced within the plastics world? Have you had any special difficulties getting certain types of kit, certain makers, certain paint lines?

The biggest problem is the scale of the distribution world. There are so many different companies, and everyone has different products. For the most part, all major brands are obtainable, but I do find some of the more unique products harder to get due to long backorders and /or unavailability though the distributors I work with.

Is there a genre of model which seems to be really popular at your store – like cars, Gundam?

Car kits are definitely my top seller, followed by Gundam. Since I opened, I have seen an increase in military kits. I think that's due in part to bringing in more options as far as brands and types of vehicles.

Finally, Cincinnati Scale Modelers has really appreciated your partnership with donating to our raffle, and we love to advertise you on our website and newsletters. Is there anything else that our club could do for you?

Keep building, and keep sharing the joys of the hobby world. Stop by the shop and hangout with us and show off your builds, and keep the tradition of scale modeling alive for decades to come.

GO VISIT PERFORANCE HOBBIES SOUTH!

2446 ANDERSON ROAD

CRESCENT SPRINGS, KY 41047

A Visit to Wonderland

by Chris Vandergrift

Wonderland was established more than 50 years ago and is Scotland's largest model specialist.

Lots of Airfix as you might guess, it's a full wall for sure. It's a huge shop with R/C, LEGO, Warhammer and such. They're not afraid to stock the big stuff either – multiple kits in each of 1/16 armour, 1/200 ships and 1/24 aircraft.

The storefront doesn't make it look as big as it is. The store goes deep back into the block and spreads out a little bit in the back in a T-shape.

I found everything in here from plastic bagged kits to vacuum form models, but oddly, none of those all-photoetch kits. My fav though, was the Italeri custom show trucks that are on the European circuit. We can never get those in the States.

Prices include tax, also known as VAT here. And don't bring Euros, they only take pounds in the UK, or the Scot version of the pound note, though you can't use that outside of Scotland.

I really found it hard not to come home with a kit to add to my stash. Go figure!

So, I went back up to the Wonderland shop to look at those show trucks. I decided the determining factor would be, "if it fits in my backpack, I'm gonna go ahead and buy one." Guess what? Of course, I found one that fit, and I bought the Abarth you see in the picture!

PostScript… lol for those who may end up traveling, there's no tariff, tax, or duty due upon reentry to the US 👍 just book a $1300 ticket and get your shipping for free 🤣




ITALERI
No 3934 model kit modèle réduit
1:24 scale échelle
SHOW TRUCKS
Super decals sheet
for 2 versions
Chromed wheels
New tyres
IVECO Hi-Way E5 Abarth
ABARTH
IVECO
FJ 619JS
ABARTH
MICHELIN



AUTO HILFE
T.S.WOLFF
ITALERI
MBSKEUROCAB6X4
1:24
SALE
59.99
A-26"B Invader
WONDERLAND MODELS
IVECOTurbostar190.48Special
IVECO Hi-Way 480 E5 Low Roof
IVECO Hi-Way E5 Abarth
BLACKTHUNDER AUSTRALIAN TRUCK
Stinger
Volvo FH4 Globetrotter Medium Roof
Mercedes-Benz 2238 6x4
MAN F8 19.321 4x2
40' Container Trailer
VOLVOFHPLATDAK
IVECOS-WAY
Martin B-57B
RENAULTAE500MAGNUM
IVECO 190.38 Cowboy
SALE
76.99
NOW
59.99
VOLVO
FIAT131
Jaguar XJ220 Racing

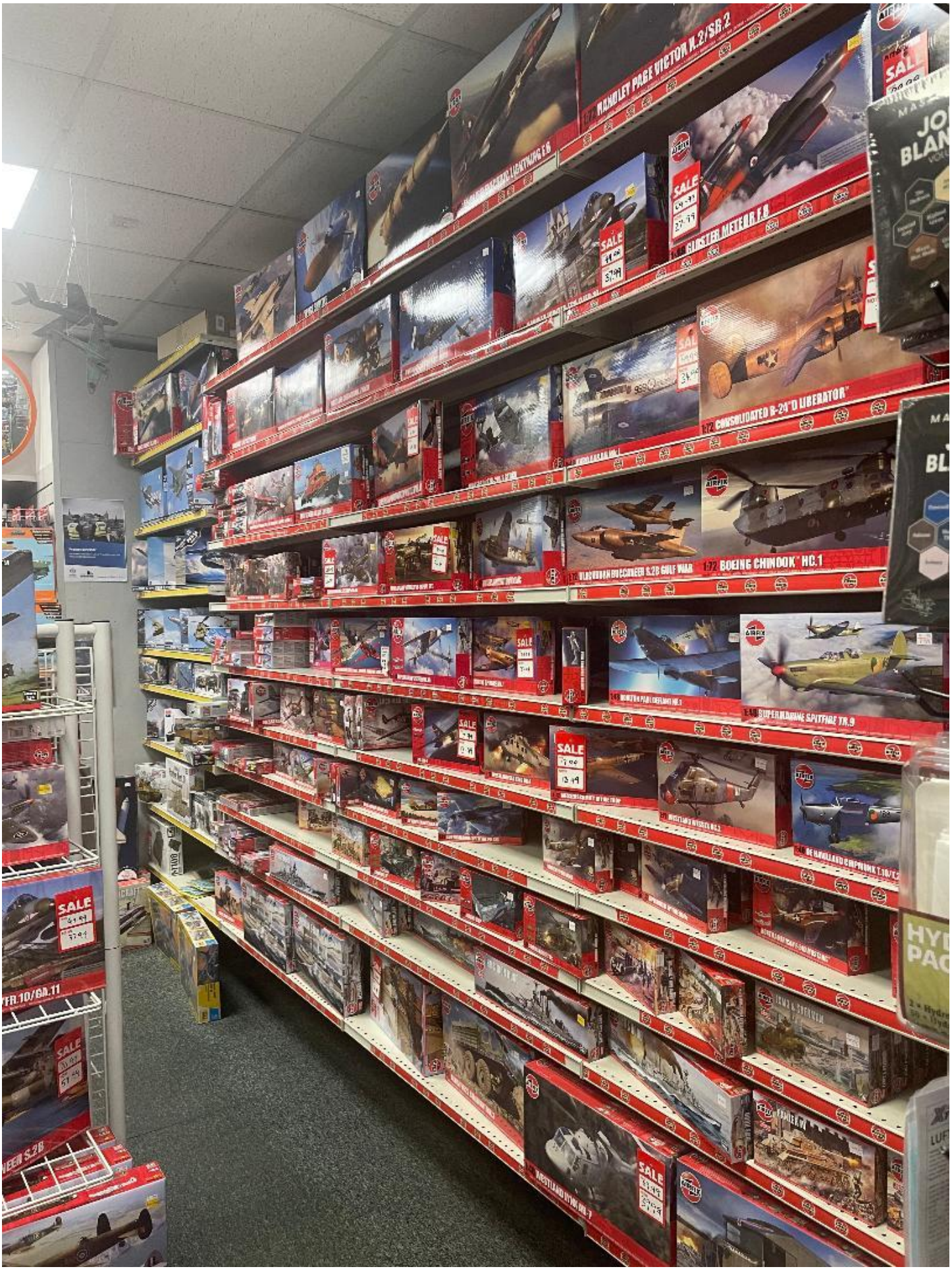
1:72 HANDLEY PAGE VICTOR K.2/SR.2
1:48 GLOSTER METEOR F.8
1:72 CONSOLIDATED B-24"D LIBERATOR"
1:72 BOEING CHINOOK" HC.1
1:48 SUPERMARINE SPITFIRE TR.9
SALE

Sponsors


SQUADRON
the Indian Mound Cafe
631-3010
VALUE GEAR
Daniele found miniatures
GORILLA
MRC
TECHNOLOGY. PERFECTED.
MODEL RECTIFIER CORPORATION
Revell
ICM
Performance Hobbies South
"OUR EXPERIENCE MAKES THE DIFFERENCE"
SCALE MODEL PODCAST
INSIDE THE INDUSTRY
PLASTIC MODEL MOJO